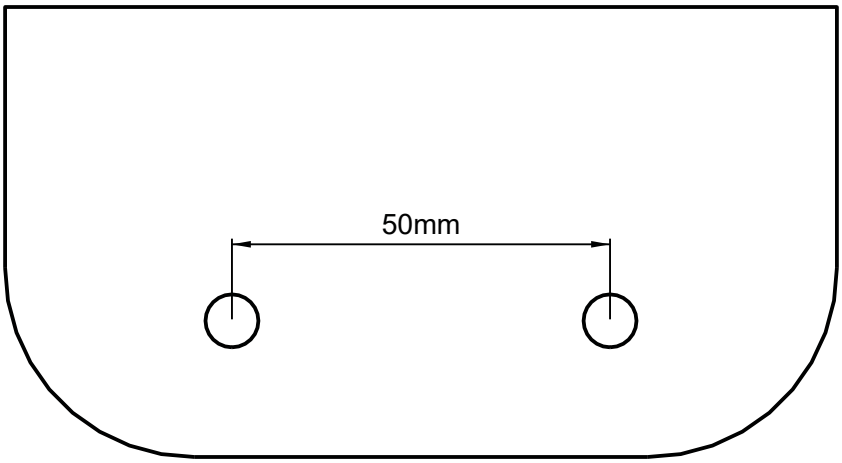
50mm

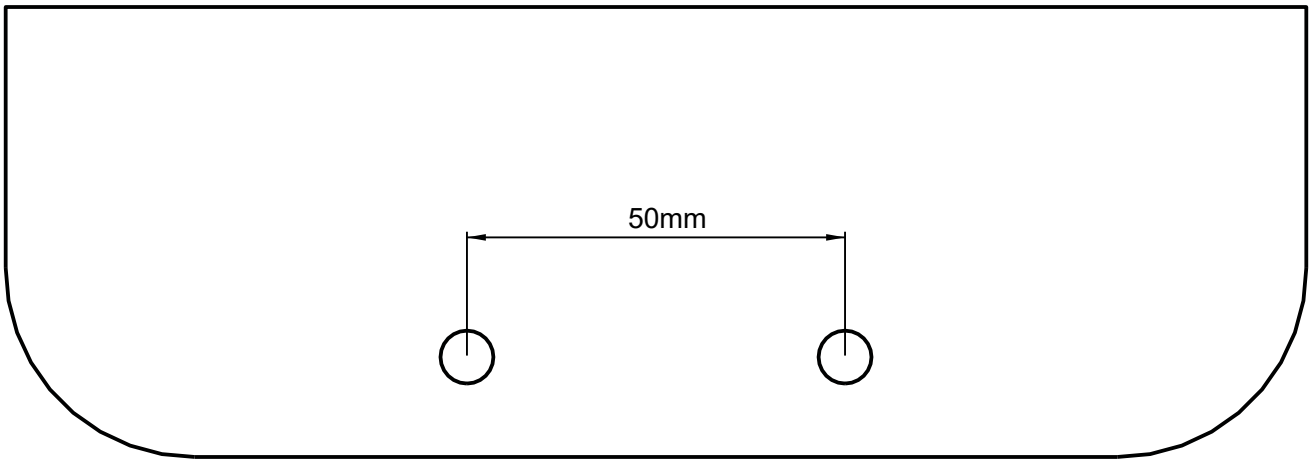
50mm